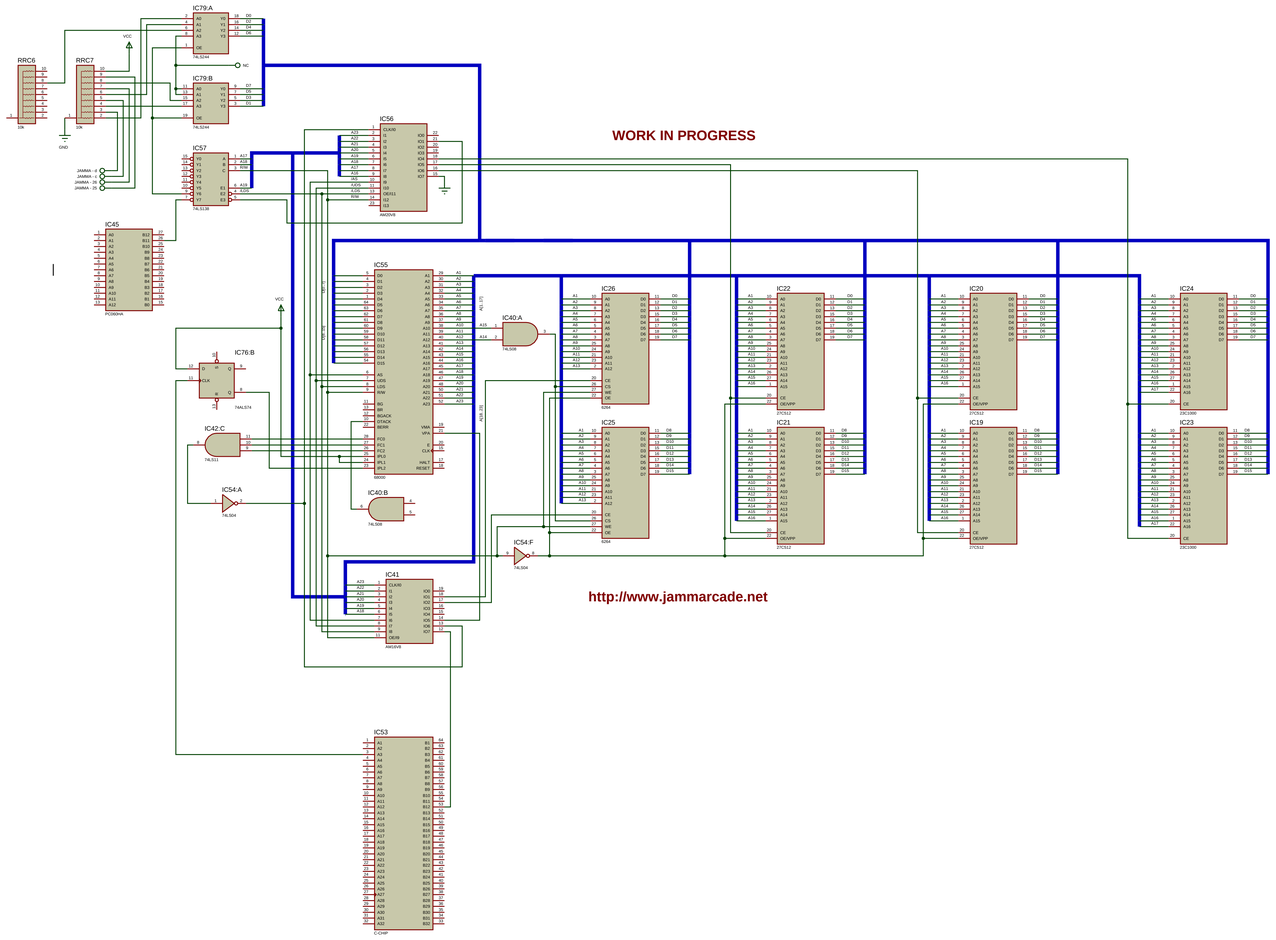
WORK IN PROGRESS
http://www.jammarcade.net
IC79:A
IC79:B
RRC6
RRC7
IC56
IC57
IC45
IC55
IC76:B
IC42:C
IC54:A
IC40:B
IC40:A
IC54:F
IC41
IC53
IC26
IC25
IC22
IC21
IC20
IC19
IC24
IC23